SALES DRAWING SALES DRAWING

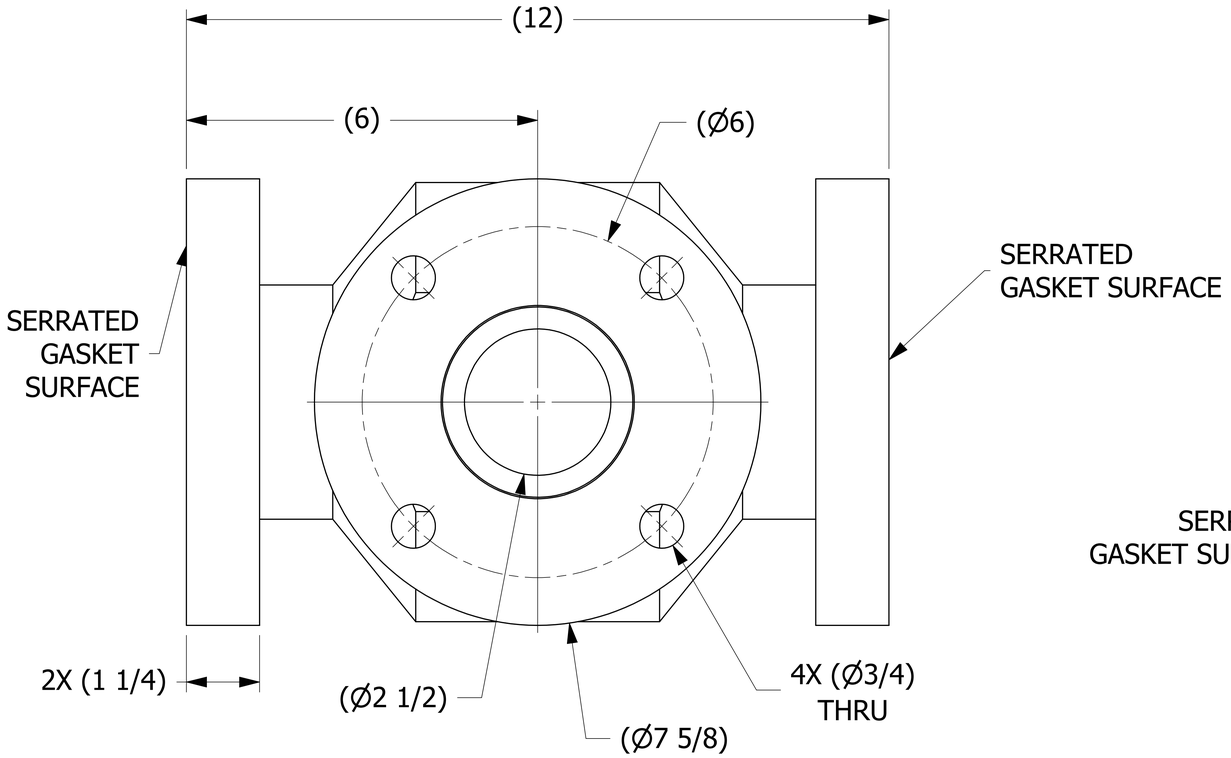

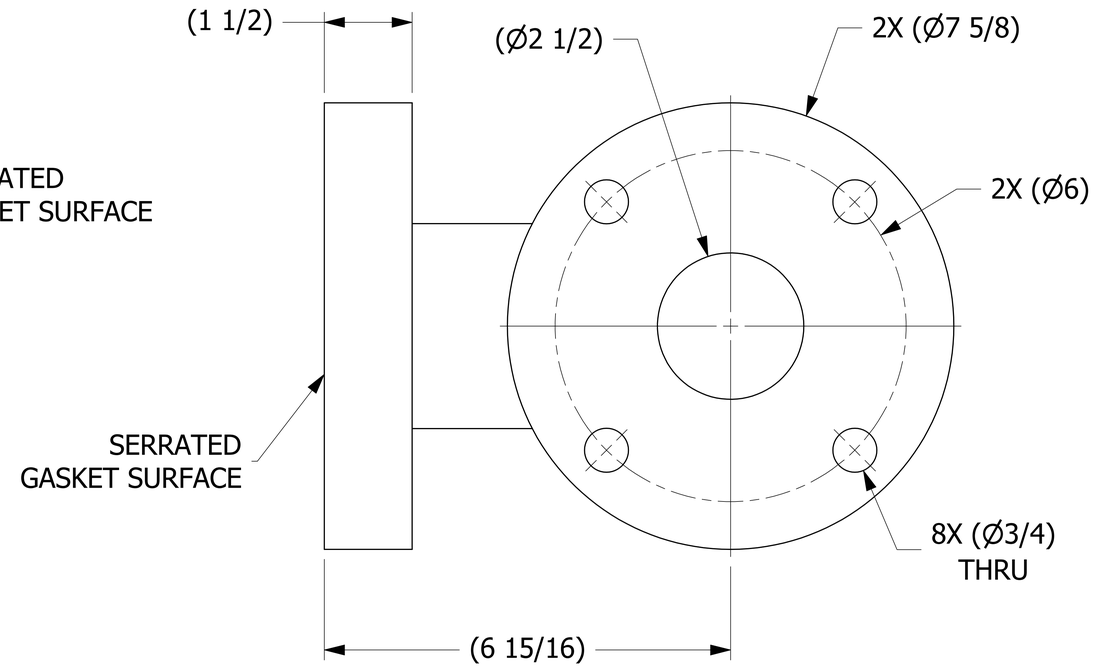

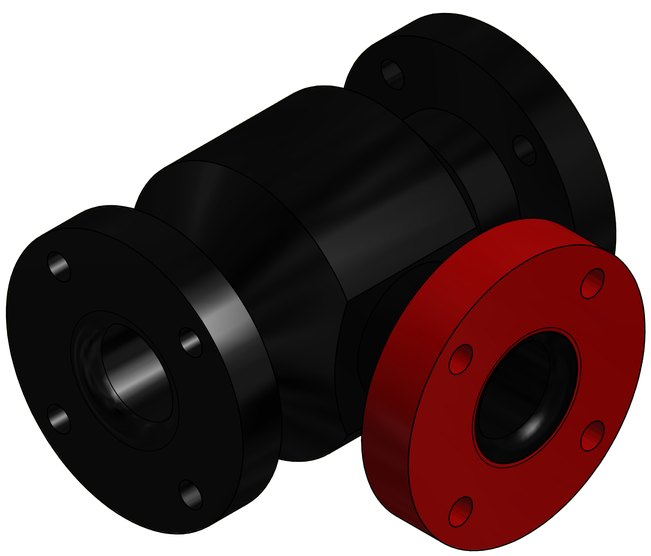

ISOMETRIC VIEW

NOTE:
SOLD TO WORLEY WELDING ONLY.

REV	BY	DATE	DESCRIPTION
F	JG	3-24-16	UPDATED HS3PTB1, NOTES, DIMS
E	KHK	2-20-13	UPDATED TITLEBLOCK & TO CURRENT DRAFT STANDARDS, 3.250 WAS 3.270
D	GDS	7-28-11	ADDED MARKING PRESSURE NOTE
C	VD	8-12-10	REPLACED HS758FL W/ HS3FLGS, UPDATED NOTES
B	CHL	1-21-10	REPLACED HS3DTFL W/HS758FL
A	PJG	9-28-09	NEW PART ADDED TO SYSTEM

UNLESS OTHERWISE SPECIFIED DIMENSIONAL TOLERANCES
FRACTIONAL: ±1/16
X.XX: ±.03
X.XXX: ±.015
ANGULAR: ±1°
DEBURR ALL SHARP EDGES.
ALL MACHINED SURFACES TO HAVE A 125 RMS FINISH UNLESS NOTED OTHERWISE.
THIRD ANGLE PROJECTION

DRAWN BY:	PJG
CHECKED BY:	VD
PROTOTYPE BY:	PJG
PROTOTYPE DATE:	7/14/2009
APPROVED FOR PRODUCTION BY:	PJG
PRODUCTION DATE:	9/28/2009

SALCO PRODUCTS, INC.

PART NAME: PIPE TEE 3"

MATERIAL: SALCO PE

PROJECT #: 090428 | SHEET #: 1 OF 1 | SCALE: 1:1

DRAWING #: E27182 | PART #: HS3PT4

THIS PRINT, PROPERTY OF SALCO PRODUCTS INC, CONTAINS PROPRIETARY INFORMATION AND MUST NOT BE COPIED, REPRODUCED, OR USED DETRIMENTALLY TO OUR INTEREST.

SALES DRAWING SALES DRAWING